## Application

The centrifugal sumersible sewage pumps MultiStream are suitable for handling effluent or sewage in municipal and industrial pumping stations as well as in surface water drainage applications. The smaller typs are also used very successfully as portable units to deal with emergency situations.

- **The sewage pumps UAK** are suitable für handling sewage water.
- In hazardous locations **explosion-proof sewage pumps UFK** have to be used.

The adjustable axial gap of the MultiStream-pump makes it possible to re-optimize the efficiency in case of abrasion by adjusting only one single screw. This can be done very cost-effective when the maintenance is carried out and the pump keeps its optimum performance on a long-term basis.

MultiStream-pumps are recommendet for:

- effluent which contains fibrous matter
- effluent which contains solids
- mixed water
- raw effluent
- raw sludge
- rainwater

## Technical data

**Pump**
Vertical, single-stage, submersible, pump case with horizontal discharge, single channel impeller and short shaft extension. This provides a longer service life for the ball bearings and the mechanical seal.

**Bearings**
Common shaft for pump and motor, deep groove and inclined ball bearings, grease-packed.

**Seal**
Silicon carbide mechanical seal independent of sense of rotation, oil chamber and artificial carbon mechanical seal or rather SiC mechanical seal (or duplex rotary shaft seal up to size 35) as secondary seal, safe to run dry.

**Motor**
Submersible, enclosure IP68, activation through special purpose plug or control unit, protected by winding thermostats, UFK types tested by PTB (German tech. inspection authority), type of protection Ex II 2 G Ex d IIB T4.

**Materials**
Pump, motor case and impeller in GG grey cast iron (single channel impeller with n = 2800 $min^{-1}$ from size 55/2 in spheroidal graphite iron GGG), corrosion protected shaft (no contact with pumped liquid), flexible rubber sheathed cable.

**Installation**
Install pump vertically with guide rail system or pump base. Flange coupling according to DIN, coupling size B or hose tail bend up to 3" possible.

**Scope of supply**
Pump acc. to EN 12050 with 10 m cable without plug, without pump base:
a) as sewage pump UAK
b) as explosion-proof sewage pump UFK

Types of operation: Up to 40°C medium temperature
UAK/UFK Motor submerged: continuous operation S1
UAK/UFK Motor not submerged intermittent operation S3
(e.g. 15% = 1.5 min operation and 8.5 min pause)

- **Adjustable single-channel impeller**
- **Connection alternatively PN 6 or PN 10**
- **Safe to run dry**
- **Controllable oil chamber**
- **Plug type cable connection**
  **(UAK/UFK 10...–100...)**
- **SiC mechanical seal independent of sense of rotation**
- **Moisture sealed cable inlet**
- **Built-in motor protection**

## DN 65 n = 2800 min$^{-1}$

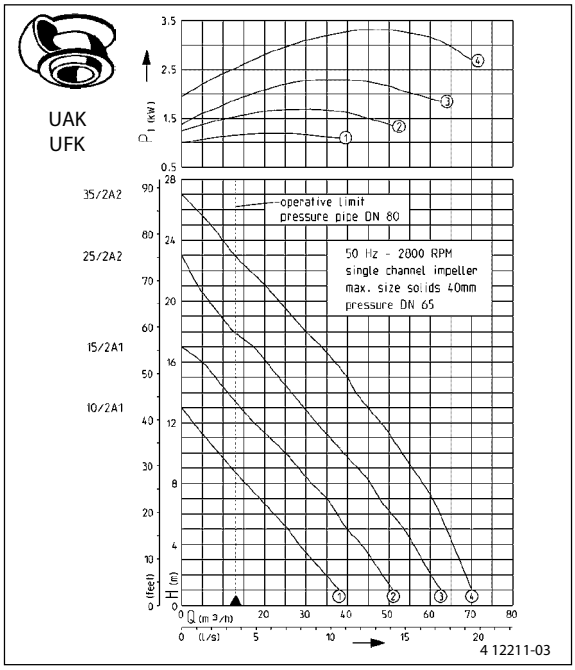


The minimum flow rate in the pressure pipe of v = 0,7 m/s is marked in the Q-H-diagram (operative limit). Pump performance is subject to ISO 9906 tolerances

## Performance

| Type UAK/UFK | 1 | 2 | 3 | 4 | 5 | 6 | 7 | 8 | 9 | 10 | 12 | 14 | 16 | 18 | 20 | 22 | 24 | H [m] |
|---|---|---|---|---|---|---|---|---|---|---|---|---|---|---|---|---|---|---|
| 10/2 A1 | 38 | 35 | 32 | 29 | 26 | 22 | 19 | 15 | 12 | 9 | | | | | | | | Flow rate Q [m³/h] |
| 15/2 A1 | 50 | 48 | 46 | 43 | 40 | 37 | 35 | 32 | 28 | 25 | 18 | 11 | 5 | | | | | |
| 25/2 A2 | 62 | 60 | 58 | 56 | 54 | 51 | 48 | 46 | 42 | 39 | 33 | 27 | 20 | 13 | 7 | | | |
| 35/2 A2 | 70 | 69 | 67 | 66 | 64 | 63 | 61 | 58 | 56 | 53 | 48 | 43 | 37 | 30 | 24 | 16 | 10 | |

## Technical data

| Type UAK/UFK | Voltage (50 Hz) Volt | Max. Motor Rating (kW) $P_1$ | $P_2$ | S3-% Operation Emerged Motor | Max. Current Ampere | RPM min$^{-1}$ | Cable (10 m) H07RN-F- | Fuse min. | Discharge branch PN 6/10 | Max. Solid Size (mm) | Weight ca. kg |
|---|---|---|---|---|---|---|---|---|---|---|---|
| 10/2 A1 | 3/PE~230/400 | 1.30 | 1.10 | 60 | 4.6/2.7 | 2943 | ° 6 G 1.5 | 10 A | DN 65 | 40 | 41 kg |
| 15/2 A1 | 3/PE~230/400 | 1.80 | 1.50 | 50 | 5.7/3.3 | 2910 | ° 6 G 1.5 | 10 A | DN 65 | 40 | 42 kg |
| 25/2 A2 | 3/PE~230/400 | 2.60 | 2.10 | 40 | 7.6/4.4 | 2860 | ° 6 G 1.5 | 10 A | DN 65 | 40 | 48 kg |
| 35/2 A2 | 3/PE~230/400 | 3.70 | 3.04 | 40 | 11.5/6.6 | 2895 | ° 6 G 1.5 | 10 A | DN 65 | 40 | 52 kg |

° plug-in

## DN 80 / DN 100 n = 2800 min$^{-1}$

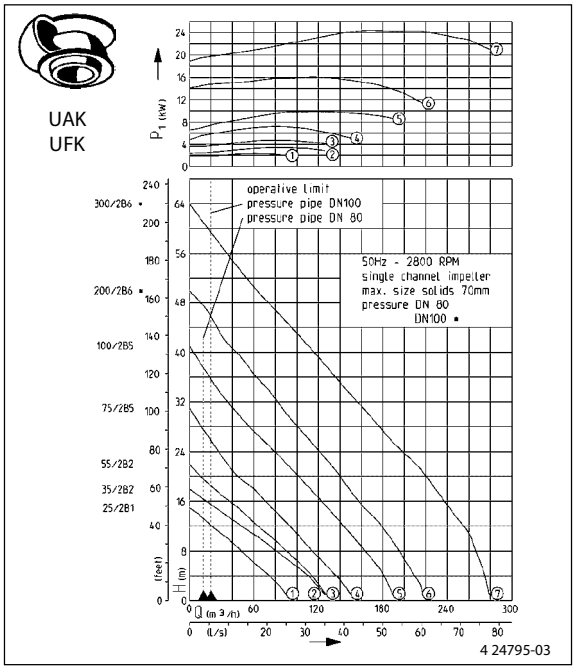


The minimum flow rate in the pressure pipe of v = 0,7 m/s is marked in the Q-H-diagram (operative limit).

## DN 80 / DN 100 n = 1400 min$^{-1}$

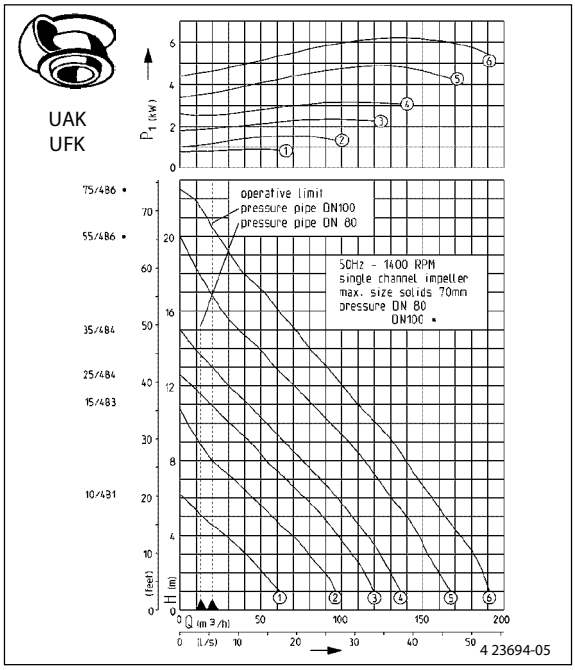


Pump performance is subject to ISO 9906 tolerances

## Performance

| Type UAK/UFK | 1 | 3 | 6 | 9 | 12 | 15 | 18 | 21 | 24 | 27 | 30 | 33 | 36 | 40 | 43 | 46 | 50 | 53 | 56 | 60 | H [m] |
|---|---|---|---|---|---|---|---|---|---|---|---|---|---|---|---|---|---|---|---|---|---|
| 25/2 B1 | 91 | 80 | 62 | 43 | 21 | | | | | | | | | | | | | | | | Flow rate Q [m³/h] |
| 35/2 B2 | 126 | 117 | 97 | 73 | 49 | 23 | | | | | | | | | | | | | | | |
| 55/2 B2 | 127 | 118 | 103 | 85 | 65 | 44 | 24 | 6 | | | | | | | | | | | | | |
| 75/2 B5 | 150 | 142 | 126 | 110 | 93 | 77 | 59 | 42 | 27 | 15 | | | | | | | | | | | |
| 100/2 B5 | 190 | 184 | 173 | 159 | 144 | 129 | 113 | 97 | 78 | 63 | 46 | 32 | 18 | | | | | | | | |
| 200/2 B6 | 217 | 215 | 204 | 191 | 177 | 162 | 149 | 136 | 120 | 104 | 91 | 77 | 62 | 43 | 28 | 19 | | | | | |
| 300/2 B6 | 280 | 277 | 270 | 263 | 254 | 242 | 229 | 216 | 199 | 183 | 167 | 152 | 136 | 113 | 100 | 84 | 63 | 49 | 34 | 17 | |
| **UAK/UFK** | **1** | **2** | **3** | **4** | **5** | **6** | **7** | **8** | **9** | **10** | **11** | **12** | **14** | **15** | **16** | **17** | **18** | **20** | | | **H [m]** |
| 10/4 B1 | 60 | 51 | 40 | 28 | 14 | 3 | | | | | | | | | | | | | | | Flow rate Q [m³/h] |
| 15/4 B3 | 98 | 89 | 79 | 69 | 57 | 45 | 33 | 20 | 12 | 5 | | | | | | | | | | | |
| 25/4 B4 | 120 | 114 | 106 | 97 | 87 | 77 | 65 | 53 | 43 | 31 | 19 | | | | | | | | | | |
| 35/4 B4 | 132 | 125 | 119 | 112 | 104 | 95 | 85 | 74 | 64 | 53 | 43 | 30 | 10 | | | | | | | | |
| 55/4 B6 | 167 | 160 | 154 | 147 | 140 | 132 | 123 | 114 | 104 | 93 | 82 | 72 | 49 | 39 | 28 | 19 | 12 | | | | |
| 75/4 B6 | 191 | 188 | 181 | 173 | 163 | 157 | 149 | 141 | 131 | 122 | 113 | 104 | 82 | 73 | 62 | 52 | 41 | 24 | | | |

## Technical Data

| Type | Voltage (50 Hz) Volt | Max. Motor Rating (kW) $P_1$ | $P_2$ | S3-% Operation Emerged Motor | Max. Current Ampere | RPM min$^{-1}$ | Cable (10 m) H07RN-F- | Fuse min. | Discharge branch PN 6/10 | Max. Solid Size (mm) | Weight ca. kg |
|---|---|---|---|---|---|---|---|---|---|---|---|
| 25/2 B1 | 3/PE~230/400 | 2.60 | 2.10 | 40 | 7.6/ 4.4 | 2860 | ° 6 G 1.5 | 10 A | DN 80 | 70 | 45 kg |
| 35/2 B2 | 3/PE~230/400 | 3.70 | 3.04 | 40 | 11.5/ 6.6 | 2895 | ° 6 G 1.5 | 10 A | DN 80 | 70 | 55 kg |
| 55/2 B2 | 3/PE~400/690 | 5.20 | 4.45 | 40 | 8.7/ 5.0 | 2910 | ° 10 G 2.5 | *16 A | DN 80 | 70 | 88 kg |
| 75/2 B5 | 3/PE~400/690 | 7.70 | 6.60 | 30 | 13.2/ 7.7 | 2925 | ° 10 G 2.5 | *20 A | DN 80 | 70 | 98 kg |
| 100/2 B5 | 3/PE~400/690 | 10.50 | 9.20 | 30 | 17.6/10.2 | 2920 | ° 10 G 2.5 | *25 A | DN 80 | 70 | 121 kg |
| 200/2 B6 | 3/PE~400/690 | 17.30 | 15.40 | 45 | 28.8/16.7 | 2940 | 10 G 2.5 | *35 A | DN 100 | 70 | 212 kg |
| 300/2 B6 | 3/PE~400/690 | 27.00 | 24.45 | 35 | 43.0/24.7 | 2950 | 7G6+3x1 | *50 A | DN 100 | 70 | 257 kg |
| 10/4 B1 | 3/PE~230/400 | 0.95 | 0.73 | 50 | 4.2/ 2.4 | 1466 | ° 6 G 1.5 | 10 A | DN 80 | 70 | 45 kg |
| 15/4 B3 | 3/PE~230/400 | 1.80 | 1.40 | 40 | 5.9/ 3.4 | 1426 | ° 6 G 1.5 | 10 A | DN 80 | 70 | 50 kg |
| 25/4 B4 | 3/PE~230/400 | 2.70 | 2.04 | 25 | 7.9/ 4.6 | 1376 | ° 6 G 1.5 | 10 A | DN 80 | 70 | 59 kg |
| 35/4 B4 | 3/PE~230/400 | 3.50 | 2.65 | 25 | 12.0/ 6.9 | 1424 | ° 6 G 1.5 | 10 A | DN 80 | 70 | 62 kg |
| 55/4 B6 | 3/PE~400/690 | 5.80 | 4.65 | 20 | 10.2/ 5.9 | 1430 | ° 10 G 2.5 | *16 A | DN 100 | 70 | 111 kg |
| 75/4 B6 | 3/PE~400/690 | 7.20 | 5.90 | 25 | 12.8/ 7.4 | 1432 | ° 10 G 2.5 | *20 A | DN 100 | 70 | 116 kg |

° plug-in

* Value for Y/△-starting

## DN 100 n = 1400 min$^{-1}$

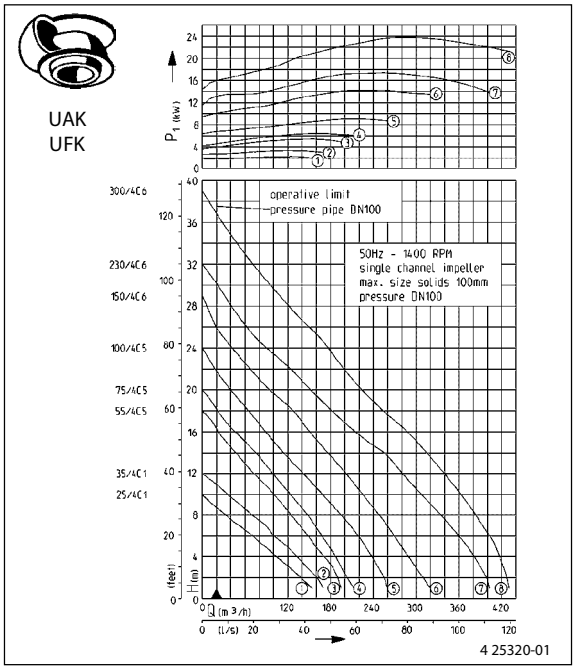


The minimum flow rate in the pressure pipe of v = 0,7 m/s is marked in the Q-H-diagram (operative limit).

## DN 100 n = 1400 min$^{-1}$

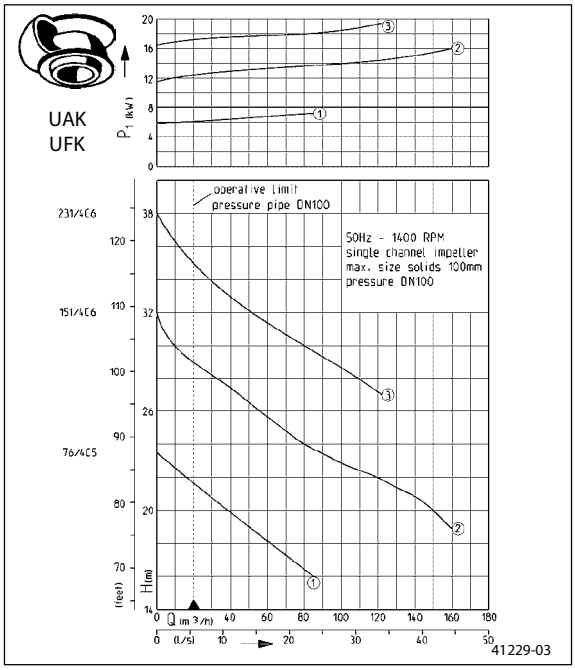


Pump performance is subject to ISO 9906 tolerances

## Performance

| Type UAK/UFK | 1 | 3 | 5 | 7 | 9 | 12 | 14 | 16 | 18 | 20 | 23 | 24 | 26 | 27 | 28 | 29 | 30 | 31 | 34 | 37 | 38 | H [m] |
|---|---|---|---|---|---|---|---|---|---|---|---|---|---|---|---|---|---|---|---|---|---|---|
| 25/4 C1 | 154 | 122 | 87 | 51 | 16 | | | | | | | | | | | | | | | | | Flow rate Q [m³/h] |
| 35/4 C1 | 170 | 146 | 119 | 89 | 54 | | | | | | | | | | | | | | | | | |
| 55/4 C5 | 198 | 181 | 160 | 136 | 112 | 74 | 45 | 22 | | | | | | | | | | | | | | |
| 75/4 C5 | 212 | 195 | 179 | 160 | 138 | 99 | 74 | 46 | 22 | | | | | | | | | | | | | |
| 100/4 C5 | 260 | 247 | 228 | 207 | 182 | 142 | 114 | 89 | 65 | 40 | 9 | | | | | | | | | | | |
| 150/4 C6 | 320 | 302 | 280 | 260 | 236 | 202 | 177 | 152 | 126 | 96 | 54 | 43 | 20 | 14 | 8 | | | | | | | |
| 230/4 C6 | 405 | 390 | 372 | 344 | 320 | 283 | 255 | 218 | 182 | 155 | 110 | 91 | 62 | 51 | 40 | 32 | 22 | 8 | | | | |
| 300/4 C6 | 430 | 421 | 411 | 393 | 374 | 341 | 315 | 289 | 254 | 225 | 188 | 176 | 151 | 135 | 117 | 107 | 95 | 83 | 47 | 19 | 10 | |
| **Typ UAK/UFK** | **1** | **3** | **5** | **7** | **9** | **12** | **14** | **16** | **18** | **20** | **23** | **24** | **26** | **27** | **28** | **29** | **30** | **31** | **34** | **37** | **38** | **H [m]** |
| 76/4 C5 | | | | | | | | 85 | 62 | 38 | 9 | | | | | | | | | | | Flow rate Q [m³/h] |
| 151/4 C6 | | | | | | | | | | 149 | 101 | 81 | 54 | 44 | 35 | 23 | 10 | | | | | |
| 231/4 C6 | | | | | | | | | | | | | | 125 | 111 | 94 | 80 | 68 | 31 | | | |

## Technical Data

| Type UAK/UFK | Voltage (50 Hz) Volt | Max. Motor Rating (kW) $P_1$ | $P_2$ | S3-% Operation Emerged Motor | Max. Current Ampere | RPM min$^{-1}$ | Cable (10 m) H07RN-F- | Fuse min. | Discharge branch PN 6/10 | Max. Solid Size (mm) | Weight ca. kg |
|---|---|---|---|---|---|---|---|---|---|---|---|
| 25/4 C1 | 3/PE~230/400 | 2.40 | 1.90 | 30 | 7.3/ 4.2 | 1395 | ° 6 G 1.5 | 10 A | DN 100 | 100 | 63 kg |
| 35/4 C1 | 3/PE~230/400 | 3.50 | 2.65 | 25 | 12.0/ 6.9 | 1424 | ° 6 G 1.5 | 10 A | DN 100 | 100 | 67 kg |
| 55/4 C5 | 3/PE~400/690 | 5.80 | 4.65 | 20 | 10.2/ 5.9 | 1430 | ° 10 G 2.5 | *16 A | DN 100 | 100 | 119 kg |
| 75/4 C5 | 3/PE~400/690 | 7.20 | 5.90 | 25 | 12.8/ 7.4 | 1432 | ° 10 G 2.5 | *20 A | DN 100 | 100 | 124 kg |
| 100/4 C5 | 3/PE~400/690 | 9.50 | 7.94 | 25 | 17.2/10.0 | 1444 | ° 10 G 2.5 | *25 A | DN 100 | 100 | 138 kg |
| 150/4 C6 | 3/PE~400/690 | 15.00 | 13.20 | 40 | 26.7/15.5 | 1466 | 10 G 2.5 | *35 A | DN 100 | 100 | 247 kg |
| 230/4 C6 | 3/PE~400/690 | 19.30 | 17.00 | 35 | 34.1/19.8 | 1460 | 10 G 2.5 | *35 A | DN 100 | 100 | 275 kg |
| 300/4 C6 | 3/PE~400/690 | 25.50 | 22.65 | 25 | 45.5/26.4 | 1460 | 7G6+3x1 | *50 A | DN 100 | 100 | 296 kg |
| 76/4 C5 | 3/PE~400/690 | 8.25 | 6.70 | 15 | 14.2/ 8.2 | 1409 | ° 10 G 2.5 | *20 A | DN 100 | 100 | 124 kg |
| 151/4 C6 | 3/PE~400/690 | 17.50 | 15.30 | 25 | 30.6/17.7 | 1452 | 10 G 2.5 | *35 A | DN 100 | 100 | 247 kg |
| 231/4 C6 | 3/PE~400/690 | 22.00 | 19.10 | 25 | 37.9/22.0 | 1446 | 10 G 2.5 | *35 A | DN 100 | 100 | 276 kg |

° plug-in

* Value for Y/△-starting

## DN 150 n = 1400 min$^{-1}$

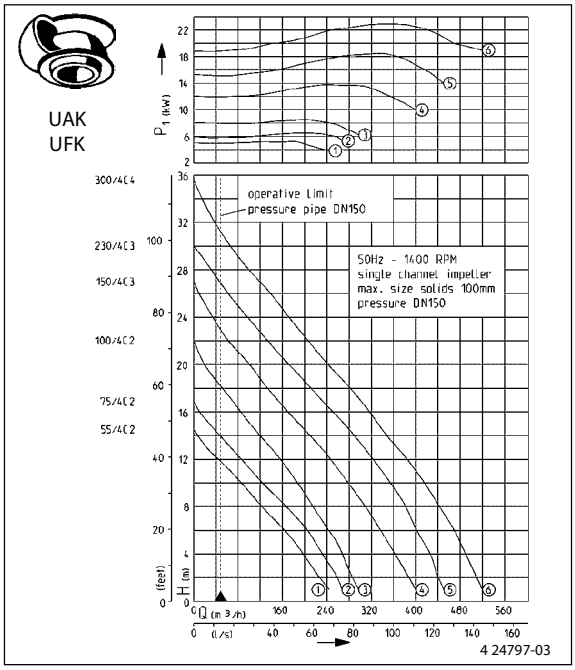


The minimum flow rate in the pressure pipe of v = 0,7 m/s is marked in the Q-H-diagram (operative limit).

## DN 150 n = 1400 min$^{-1}$

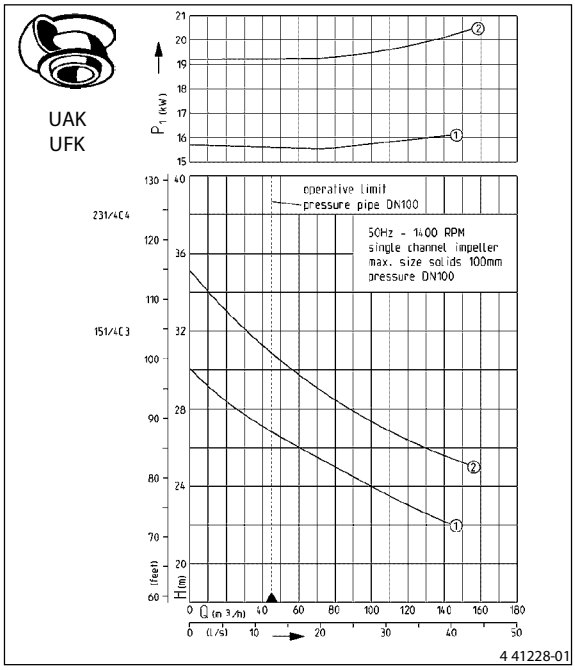


Pump performance is subject to ISO 9906 tolerances

## Performance

| Type UAK/UFK | 1 | 3 | 5 | 7 | 9 | 11 | 13 | 15 | 17 | 19 | 20 | 21 | 24 | 25 | 27 | 29 | 30 | 31 | 33 | 34 | | H [m] |
|---|---|---|---|---|---|---|---|---|---|---|---|---|---|---|---|---|---|---|---|---|---|---|
| 55/4 C2 | 245 | 214 | 184 | 144 | 105 | 62 | 22 | | | | | | | | | | | | | | | Flow rate Q [m³/h] |
| 75/4 C2 | 270 | 245 | 216 | 185 | 146 | 105 | 64 | 26 | | | | | | | | | | | | | | |
| 100/4 C2 | 300 | 278 | 258 | 229 | 202 | 167 | 130 | 96 | 65 | 33 | 18 | | | | | | | | | | | |
| 150/4 C3 | 400 | 373 | 349 | 325 | 295 | 263 | 227 | 192 | 150 | 116 | 100 | 81 | 34 | 21 | | | | | | | | |
| 230/4 C3 | 455 | 434 | 415 | 394 | 369 | 338 | 308 | 272 | 231 | 191 | 172 | 153 | 98 | 80 | 45 | 17 | | | | | | |
| 300/4 C4 | 520 | 500 | 478 | 455 | 426 | 399 | 364 | 334 | 298 | 263 | 242 | 223 | 172 | 157 | 118 | 83 | 66 | 51 | 26 | 15 | | |
| **Type UAK/UFK** | **1** | **3** | **5** | **7** | **9** | **12** | **14** | **16** | **18** | **20** | **23** | **24** | **26** | **27** | **28** | **29** | **30** | **31** | **34** | **37** | **38** | **H [m]** |
| 151/4 C3 | | | | | | | | | | | 119 | 98 | 61 | 44 | 28 | 15 | | | | | | Flow rate Q [m³/h] |
| 231/4 C4 | | | | | | | | | | | | | 136 | 113 | 92 | 75 | 59 | 43 | 7 | | | |

## Technical Data

| Type UAK/UFK | Voltage (50 Hz) Volt | Max. Motor Rating (kW) $P_1$ | $P_2$ | S3-% Operation Emerged Motor | Max. Current Ampere | RPM min$^{-1}$ | Cable (10 m) H07RN-F- | Fuse min. | Discharge Branche PN 6/10 | Max. Solid Size (mm) | Weight ca. kg |
|---|---|---|---|---|---|---|---|---|---|---|---|
| 55/4 C2 | 3/PE~400/690 | 5.80 | 4.65 | 20 | 10.2/ 5.9 | 1430 | ° 10 G 2.5 | *16 A | DN 150 | 100 | 125 kg |
| 75/4 C2 | 3/PE~400/690 | 7.20 | 5.90 | 25 | 12.8/ 7.4 | 1432 | ° 10 G 2.5 | *20 A | DN 150 | 100 | 131 kg |
| 100/4 C2 | 3/PE~400/690 | 9.50 | 7.94 | 25 | 17.2/10.0 | 1444 | ° 10 G 2.5 | *25 A | DN 150 | 100 | 149 kg |
| 150/4 C3 | 3/PE~400/690 | 15.00 | 13.20 | 40 | 26.7/15.5 | 1466 | 10 G 2.5 | *35 A | DN 150 | 100 | 268 kg |
| 230/4 C3 | 3/PE~400/690 | 19.30 | 17.00 | 35 | 34.1/19.8 | 1460 | 10 G 2.5 | *35 A | DN 150 | 100 | 288 kg |
| 300/4 C4 | 3/PE~400/690 | 25.50 | 22.65 | 25 | 45.5/26.4 | 1460 | 7G6+3x1 | *50 A | DN 150 | 100 | 308 kg |
| 151/4 C3 | 3/PE~400/690 | 17.50 | 15.30 | 25 | 30.6/17.7 | 1452 | 10 G 2.5 | *35 A | DN 150 | 100 | 269 kg |
| 231/4 C4 | 3/PE~400/690 | 22.00 | 19.10 | 25 | 37.9/22.0 | 1446 | 10 G 2.5 | *35 A | DN 150 | 100 | 290 kg |

° plug-in

* Value for Y/△-starting

## DN 200 n = 1400 min$^{-1}$

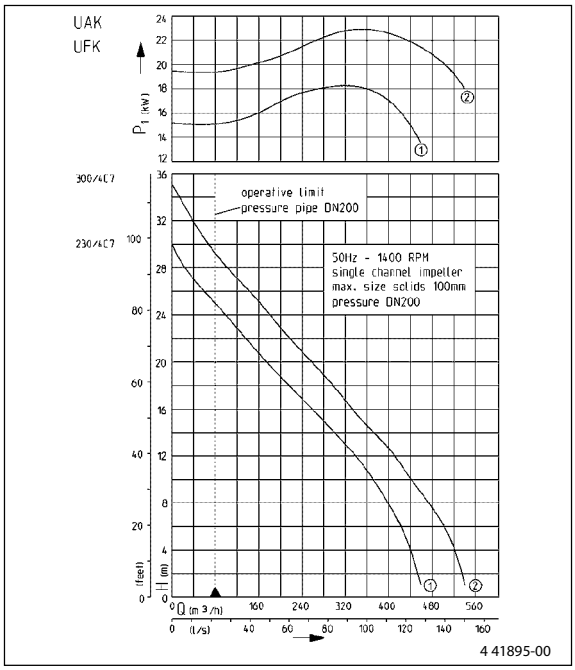


The minimum flow rate in the pressure pipe of v = 0,7 m/s is marked in the Q-H-diagram (operative limit).

## Performance

| Type UAK/UFK | 1 | 3 | 5 | 7 | 9 | 11 | 13 | 15 | 17 | 19 | 20 | 21 | 24 | 25 | 27 | 29 | 30 | 31 | 33 | 34 | H [m] |
|---|---|---|---|---|---|---|---|---|---|---|---|---|---|---|---|---|---|---|---|---|---|
| 230/4 C7 | 460 | 443 | 429 | 409 | 387 | 358 | 322 | 282 | 240 | 196 | 177 | 158 | 97 | 78 | 42 | 11 | | | | | Flow rate Q [m³/h] |
| 300/4 C7 | 540 | 524 | 509 | 483 | 453 | 427 | 396 | 355 | 318 | 280 | 258 | 238 | 180 | 165 | 126 | 87 | 71 | 54 | 26 | 15 | |

## Technical Data

| Type UAK/UFK | Voltage (50 Hz) Volt | Max. Motor Rating (kW) $P_1$ | $P_2$ | S3-% Operation Emerged Motor | Max. Current Ampere | RPM min$^{-1}$ | Cable (10 m) H07RN-F- | Fuse min. | Discharge branch PN 10 | Max. Solid Size (mm) | Weight ca. |
|---|---|---|---|---|---|---|---|---|---|---|---|
| 230/4 C7 | 3/PE~400/690 | 19.3 | 17.0 | 35 | 34.1/19.8 | 1460 | 10 G 2.5 | *35 A | DN 200 | 100 | 295 kg |
| 300/4 C7 | 3/PE~400/690 | 25.5 | 22.65 | 25 | 45.5/26.4 | 1460 | 7 G 6+3x1 | *50 A | DN 200 | 100 | 315 kg |

* Value for Y/△-starting

## Example of installation GR

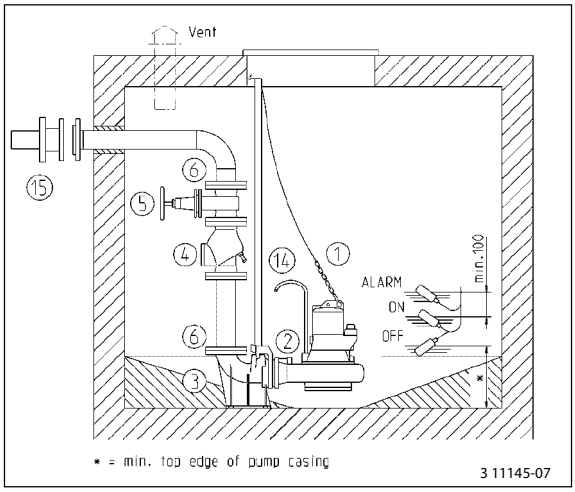


## Example of installation ST

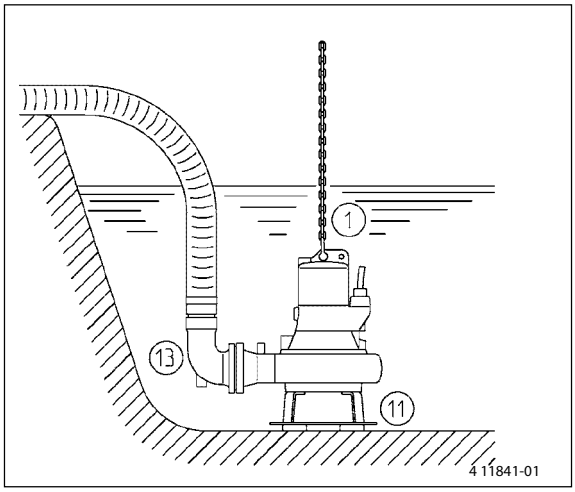


## Accessories

**Selection acc. to the size of casing, e.g. UAK 35/4 B4**

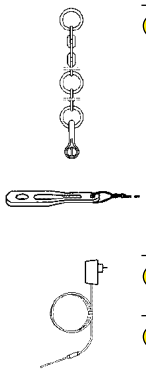


| | Description | Dimensions | | | Type | Code No. | A1 | A2 | B1 | B2 | B3 | B4 | B5 | B6 | C1 | C2 | C3 | C4 | C5 | C6 | C7 | AW | BW1 | CW1 | CW2 |
|---|---|---|---|---|---|---|---|---|---|---|---|---|---|---|---|---|---|---|---|---|---|---|---|---|---|
| | | | | | | | MultiStream-Pumps | | | | | | | | | | | | | | | MultiFree-P. | | | |
| 1 | **Chain** DIN 766 | | | carring capacity | | | | | | | | | | | | | | | | | | | | | |
| | | 5 x 18.5. 2 rings | | 2.5 m | 320 kg | **JP 19189** | ● | ● | ● | ● | ● | ● | | | ● | | | | | | | ● | ● | ● | |
| | | 5 x 18,5, 2 rings | | 5.0 m | 320 kg | **JP 00423** | ● | ● | ● | ● | ● | ● | | | ● | | | | | | | ● | ● | ● | |
| | | 7 x 22,0, 2 rings | | 5.0 m | 630 kg | **JP 00416** | | | | | | | ● | ● | | ● | ● | ● | ● | ● | ● | | | | ● |
| | Stain.1.4401, | 4 x 16,0, 5 rings, 1 shackle, | | 2.5 m | 200 kg | **JP 23986** | ● | ● | ● | ● | ● | ● | | | ● | | | | | | | ● | ● | ● | |
| | Stain.1.4401, | 4 x 16,0, 8 rings, 2 shackles, | | 5.0 m | 200 kg | **JP 24934** | ● | ● | ● | ● | ● | ● | | | ● | | | | | | | ● | ● | ● | |
| | Stain.1.4401, | 6 x 18,5, 2 rings, 2 shackles, | | 5.0 m | 400 kg | **JP 23989** | | | | | | | ● | ● | | ● | ● | ● | ● | ● | ● | | | | ● |
| | **Hoist**(not for 4 mm stainless steel chains) | | | | 350 kg | **JP 21394** | ● | ● | ● | ● | ● | ● | ● | ● | ● | ● | ● | ● | ● | ● | ● | ● | ● | ● | ● |
| 2 | **Seal leak control** | | | | DKG | **JP 00252** | ● | ● | ● | ● | ● | ● | ● | ● | ● | ● | ● | ● | ● | ● | ● | ● | ● | ● | ● |
| | | | | | DKG Ex | **JP 00249** | ● | ● | ● | ● | ● | ● | ● | ● | ● | ● | ● | ● | ● | ● | ● | ● | ● | ● | ● |
| 3 | **Guide rail system** PN 10 (incl. accessories) | | | | | | | | | | | | | | | | | | | | | | | | |
| | | A | B | H | D DN | | | | | | | | | | | | | | | | | | | | |
| | | 170 | 226 | 280 | 80 | GR 65 | **JP 00494** | ● | ● | | | | | | | | | | | | | ● | | | |
| | | 170 | 229 | 280 | 80 | GR 80 | **JP 00495** | | | ● | ● | ● | ● | ● | | | | | | | | | | ● | |
| | | 200 | 254 | 310 | 100 | GR 100 | **JP 00496** | | | | | | | | | ● | | | | | | | | | ● |
| | | 235 | 254 | 345 | 100 | GR 101 | **JP 21037** | | | | | | | | ● | | | | | ● | ● | | | | ● |
| | | 260 | 332 | 435 | 150 | GR 151 | **JP 00693** | | | | | | | | | | ● | ● | | | | | | | |
| | | 260 | 332 | 435 | 150 | GR 151 S | **JP 09731** | | | | | | | | | ● | | | | | | | | | |
| | | 305 | 410 | 535 | 200 | GR 200 S | **JP 42275** | | | | | | | | | | | | | | ● | | | | |
| 4 | **Ball check valve*** Flange PN 10. DIN 3202. DIN EN 12050-4 | | | | | | | | | | | | | | | | | | | | | | | | |
| | (Dimensions see swing-type check valve) | | | | K 80 | **JP 09842** | ● | ● | ● | ● | ● | ● | ● | | | | | | | | | ● | ● | | |
| | **Swing-type check valve*** Flange PN 10.DIN 3202. DIN EN 12050-4 | | | | | | | | | | | | | | | | | | | | | | | | |
| | | H | D DN | PN | (except for R 150 G) | | | | | | | | | | | | | | | | | | | | |
| | | | | | without counter weight | | | | | | | | | | | | | | | | | | | | |
| | | 260 | 80 | 4 | R 80 | **JP 00706** | ● | ● | ● | ● | ● | ● | ● | | | | | | | | | ● | ● | | |
| | | 300 | 100 | 4 | R 101 | **JP 00325** | ○ | ○ | ○ | ○ | ○ | ○ | ○ | ● | ● | ○ | | | ● | ● | | ○ | ○ | ● | ● |
| | | | | | with counter weight | | | | | | | | | | | | | | | | | | | | |
| | | 260 | 80 | 4 | R 80 G | **JP 00707** | ● | ● | ● | ● | ● | ● | ● | | | | | | | | | ● | ● | | |
| | | 300 | 100 | 4 | R 100 G | **JP 00324** | ○ | ○ | ○ | ○ | ○ | ○ | ○ | ● | ● | | | | ● | ● | | ○ | ○ | ● | ● |
| | | 400 | 150 | 10 | R 150 G | **JP 00345** | | | | | | | | | | ● | ● | ● | | | | | | | |

* c/w screws and gaskets

● Main ○ Alternativ proposal

JUNG PUMPEN
Pentair Water

## Accessories

Selection acc. to the size of casing, e.g. UAK 35/4 B4

| Description | Dimensions | | | | Type | Code No. | MultiStream-Pumps A1 | A2 | B1 | B2 | B3 | B4 | B5 | B6 | C1 | C2 | C3 | C4 | C5 | C6 | C7 | MultiFree-P. AW | BW1 | CW1 | CW2 |
|---|---|---|---|---|---|---|---|---|---|---|---|---|---|---|---|---|---|---|---|---|---|---|---|---|---|
| **5 Sluice valve*** PN 10 DIN for EN 1171 | H | B | D DN | | | | | | | | | | | | | | | | | | | | | | |
| | 315 | 180 | 80 | | DN 80 | JP 00639 | ● | ● | ● | ● | ● | ● | ● | | | | | | | | | ● | ● | | |
| | 345 | 190 | 100 | | DN 100 | JP 00329 | ○ | ○ | ○ | ○ | ○ | ○ | ○ | ● | ● | ○ | | | ● | ● | | ○ | ○ | ● | ● |
| | 430 | 210 | 150 | | DN 150 | JP 00328 | | | | | | | | | | ● | ● | ● | | | | | | | |
| **6 Spigot flange for steel pipe*** | H | D | C DN | Flange PN 10 | | | | | | | | | | | | | | | | | | | | | |
| | 75 | 90 | 80 | | A 080 | JP 00686 | ● | ● | ● | ● | ● | ● | ● | | | | | | | | | ● | ● | | |
| | 76 | 114 | 80 | | B 080/100 | JP 09821 | ○ | ○ | ○ | ○ | ○ | ○ | ○ | | | | | | | | | ○ | ○ | | |
| | 100 | 114 | 100 | | C 100 | JP 00688 | | | | | | | | ● | ● | | | | ● | ● | | | | ● | ● |
| | 147 | 165 | 150 | | C 150 | JP 00703 | | | | | | | | ○ | ○ | ● | ● | ● | ○ | ○ | | | | ○ | ○ |
| **Spigot flange for plastic pipe*** F-KS | H | D | C DN | Flange PN 10 | | | | | | | | | | | | | | | | | | | | | |
| | 75 | 90 | 80 | | | JP 00686 | ● | ● | ● | ● | ● | ● | ● | | | | | | | | | ● | ● | | |
| | 85 | 110 | 80 | | | JP 00687 | ○ | ○ | ○ | ○ | ○ | ○ | ○ | | | | | | | | | ○ | ○ | | |
| | 153 | 110 | 100 | | | JP 08673 | | | | | | | | ● | ● | ○ | | | ● | ● | | | | ● | ● |
| | 173 | 160 | 150 | | | JP 08675 | | | | | | | | ○ | ○ | ● | ● | ● | ○ | ○ | | | | ○ | ○ |
| **7 Elastic connection** for pipe | DN | H | PN | D | | | | | | | | | | | | | | | | | | | | | |
| steel + plastic | 80 | 200 | 4 | 90 | DN 80 | JP 05450 | ● | ● | ● | ● | ● | ● | ● | | | | | | | | | ● | ● | | |
| steel | 100 | 200 | 4 | 114 | DN 100 | JP 16348 | ○ | ○ | ○ | ○ | ○ | ○ | ○ | ● | ● | ○ | | | ● | ● | | ○ | ○ | ● | ● |
| | 150 | 350 | 4 | 165 | DN 150 | JP 00704 | | | | | | | | | | ● | ● | ● | | | | | | | |
| plastic | 100 | 200 | 4 | 110 | DN 100 | JP 21043 | ○ | ○ | ○ | ○ | ○ | ○ | ○ | ● | ● | ○ | | | ● | ● | | ○ | ○ | ● | ● |
| | 150 | 350 | 4 | 160 | DN 150 | JP 21044 | | | | | | | | | | ● | ● | ● | | | | | | | |
| **8 Hose band clamp** | | | | | 3" (DN 80) | JP 03574 | ● | ● | ● | ● | ● | ● | ● | | | | | | | | | ● | ● | | |
| | | | | | 4" (DN 100) | JP 03575 | ○ | ○ | ○ | ○ | ○ | ○ | ○ | ● | ● | ○ | | | ● | ● | | ○ | ○ | ● | ● |
| | | | | | 6" (DN 150) | JP 00705 | | | | | | | | | | ● | ● | ● | | | | | | | |
| **9 Flanged Y-pipe*** PN 10 | H | B | C | D | DN | | | | | | | | | | | | | | | | | | | | |
| | 355 | 390 | 100 | 80 | 80/100/ 80 | JP 00448 | ● | ● | ● | ● | ● | ● | ● | | | | | | | | | ● | ● | | |
| | 355 | 390 | 100 | 100 | 100/100/100 | JP 00458 | ○ | ○ | ○ | ○ | ○ | ○ | ○ | | ● | | | | | | | ○ | ○ | ● | |
| | 355 | 390 | 150 | 100 | 100/150/100 | JP 00449 | | | | | | | | | ○ | | | | | | | | | ○ | |
| | 355 | 480 | 100 | 80 | 80/100/ 80 | JP 00202 | ● | ● | ● | ● | ● | ● | ● | | | | | | | | | ● | ● | | |
| | 355 | 480 | 100 | 100 | 100/100/100 | JP 00203 | ○ | ○ | ○ | ○ | ○ | ○ | ○ | ● | ● | | | | ● | | | ○ | ○ | ● | ○ |
| | 355 | 480 | 150 | 100 | 100/150/100 | JP 00204 | | | | | | | | ○ | ○ | | | | | | | | | ○ | ● |
| | 355 | 480 | 150 | 150 | 150/150/150 | JP 00521 | | | | | | | | ○ | ○ | ● | | | | | | | | ○ | ○ |
| **10 Reducing adapter*** to PN 10 | H | C DN | D DN | | Attn: not used in the guide rail area | | | | | | | | | | | | | | | | | | | | |
| | 100 | 80 | 100 | | DN 80/100 | JP 00498 | ● | ● | ● | ● | ● | ● | ● | | | | | | | | | ● | ● | | |
| | 200 | 100 | 150 | | DN 100/150 | JP 00510 | | | | | | | | ● | ● | | | | ● | ● | | | | ● | ● |
| **11 Pump pedestal*** | H | B | | | | | | | | | | | | | | | | | | | | | | | |
| | 76 | 245 | | | A 170 | JP 00681 | ● | | | | | | | | | | | | | | | | | | |
| | 76 | 295 | | | A 220 | JP 00682 | | ● | | | | | | | | | | | | | | ● | | | |
| | 115 | 280 | | | B 170 | JP 00683 | | | ● | | | | | | | | | | | | | | | | |
| | 115 | 330 | | | B 220 | JP 00684 | | | | ● | ● | ● | | | | | | | | | | | ● | | |
| | 145 | 345 | | | C 220 | JP 11453 | | | | | | | | | | | | | | | | | | ● | |
| | 145 | 390 | | | C 275 | JP 00685 | | | | | | | ● | ● | ● | | | | ● | | | | | | |
| | 145 | 565 | | | C 325 | JP 00701 | | | | | | | | | | ● | | | | | | | | | ● |
| | 145 | 650 | | | C 410 | JP 00702 | | | | | | | | | | | ● | ● | | ● | ● | | | | |
| **12 Flanged socket*** | H | B | C (PN10) DN | D (PN6) DN | | | | | | | | | | | | | | | | | | | | | |
| | 130 | 75 | 80 | 65 | A 80 | JP 00577 | ● | ● | | | | | | | | | | | | | | ● | | | |
| | 150 | 100 | 80 | 80 | B 80 | JP 00578 | | | ● | ● | ● | ● | ● | | | | | | | | | | ● | | |
| | 175 | 120 | 100 | 100 | C 100 | JP 00579 | | | | | | | | ● | ● | | | | ● | ● | | | | ● | ● |
| | 250 | 175 | 150 | 150 | C 150 | JP 00591 | | | | | | | | | | ● | ● | ● | | | | | | | |

Inner support sleeve is necessary (on request) for PE-HD pipe.

● Main ○ Alternativ proposal □ depented on the motor output

* c/w screws and gaskets

## Accessories

**Selection acc. to the size of casing, e.g. UAK 35/4 B4**

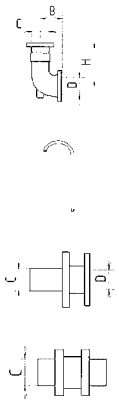

| | Description | Dimensions | | | | Type | Code No. | MultiStream-Pumps | | | | | | | | | | | | | | | MultiFree-P. | | | |
|---|---|---|---|---|---|---|---|---|---|---|---|---|---|---|---|---|---|---|---|---|---|---|---|---|---|---|
| | | | | | | | | A1 | A2 | B1 | B2 | B3 | B4 | B5 | B6 | C1 | C2 | C3 | C4 | C5 | C6 | C7 | AW | BW1 | CW1 | CW2 |
| 13 | **Coupling connection*** Size „B" (DIN 14308) | | | | | | | | | | | | | | | | | | | | | | | | | |
| | | H | B | C | D (DN) | | | | | | | | | | | | | | | | | | | | | |
| | | 180 | 75 | 21/2" | 65 | A | **JP 00503** | ● | ● | | | | | | | | | | | | | | ● | | | |
| | | 200 | 100 | 21/2" | 80 | B | **JP 00504** | | | ● | ● | ● | ● | ● | | | | | | | | | | | | |
| 14 | **Flushing tube** | Typ I | ( 10/… bis 35/…)+++ | | | | **JP 28221** | ● | ● | ● | □ | ● | ● | | | ● | | | | | | | ● | ● | ● | |
| | | Typ II | ( 55/… bis 100/…)+ | | | | **JP 28222** | | | | □ | | | ● | □ | | ● | | | ● | | | | | | ● |
| | | Typ III | (150/… bis 300/…) | | | | **JP 28223** | | | | | | | | □ | | | ● | ● | | ● | ● | | | | |
| 15 | **Flange adaptor** | DN 80 | | | | | **JP 30062** | ● | ● | ● | ● | ● | ● | ● | | | | | | | | | ● | ● | | |
| | | DN 100 | | | | | **JP 30063** | ○ | ○ | ○ | ○ | ○ | ○ | ○ | ● | ● | | | | ● | ● | | ○ | ○ | ● | ● |
| | | DN 150 | | | | | **JP 30064** | ○ | ○ | ○ | ○ | ○ | ○ | ○ | ○ | ○ | ● | ● | ● | ○ | ○ | | ○ | ○ | ○ | ○ |
| | **Pipe connector** | DN 80 | | | | | **JP 30065** | ● | ● | ● | ● | ● | ● | ● | | | | | | | | | ● | ● | | |
| | | DN 100 | | | | | **JP 30066** | ○ | ○ | ○ | ○ | ○ | ○ | ○ | ● | ● | | | | ● | ● | | ○ | ○ | ● | ● |
| | | DN 150 | | | | | **JP 30067** | ○ | ○ | ○ | ○ | ○ | ○ | ○ | ○ | ○ | ● | ● | ● | ○ | ○ | | ○ | ○ | ○ | ○ |
| | **Inner support sleeve** | DN 80, PE 100, SDR 11 | | | | | **JP 30096** | ● | ● | ● | ● | ● | ● | ● | | | | | | | | | ● | ● | | |
| | for PE-pipe | DN 100, PE 100, SDR 11 | | | | | **JP 30097** | | | | | | | | ● | ● | | | | ● | ● | | | | ● | ● |

Inner support sleeve is necessary (on request) for PE-HD pipe.

● Main ○ Alternativ □ depented on the motor output

* c/w screws and gaskets + Flushing effect from 4 m delivery head (AW, BW1 und CW1) ++ Flushing effect from 6 m delivery head (CW2)

# Dimensions guide rail system MultiStream (mm)

For permanent stations, particularly for installations which are subject to routine official safty inspections, this is a neat and low-maintenance solution.

- Easy maintenance - independent of the sump depth.
- No need to release old connections, no troublesome rese-aling of screw connections needed when putting the pump back into operation.
- No need to empty the sump with another pump in the case of failure or fault in the plant.
- Save time and money on maintenance.

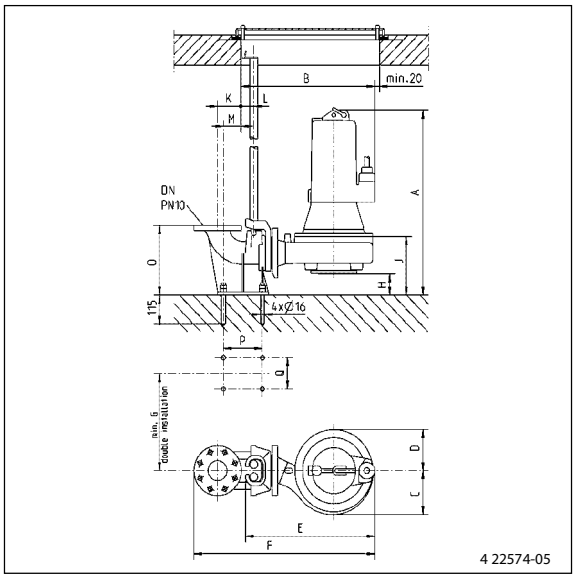


**MultiStream**

| Type UAK/UFK | GR | DN | A | B | C | D | E | F | G | H | J | K | L | M | N | O | P | Q |
|---|---|---|---|---|---|---|---|---|---|---|---|---|---|---|---|---|---|---|
| **10/2 A1** | 65 | 80 | 510 | 460 | 110 | 105 | 435 | 660 | 390 | 108 | 213 | 100 | 55 | 74 | 1" | 280 | 165 | 125 |
| **15/2 A1** | 65 | 80 | 510 | 460 | 110 | 105 | 435 | 660 | 390 | 108 | 213 | 100 | 55 | 74 | 1" | 280 | 165 | 125 |
| **25/2 A2** | 65 | 80 | 510 | 480 | 130 | 125 | 455 | 680 | 390 | 108 | 220 | 100 | 55 | 74 | 1" | 280 | 165 | 125 |
| **35/2 A2** | 65 | 80 | 545 | 480 | 130 | 125 | 455 | 680 | 390 | 108 | 220 | 100 | 55 | 74 | 1" | 280 | 165 | 125 |
| **25/2 B1** | 80 | 80 | 520 | 475 | 130 | 110 | 455 | 675 | 390 | 95 | 225 | 100 | 55 | 74 | 1" | 280 | 165 | 125 |
| **35/2 B2** | 80 | 80 | 555 | 495 | 145 | 125 | 475 | 695 | 390 | 92 | 225 | 100 | 55 | 74 | 1" | 280 | 165 | 125 |
| **55/2 B2** | 80 | 80 | 680 | 525 | 145 | 125 | 510 | 725 | 390 | 92 | 225 | 100 | 55 | 74 | 1" | 280 | 165 | 125 |
| **75/2 B5** | 80 | 80 | 685 | 565 | 180 | 165 | 550 | 765 | 390 | 85 | 235 | 100 | 55 | 74 | 1" | 280 | 165 | 125 |
| **100/2 B5** | 80 | 80 | 745 | 565 | 180 | 165 | 550 | 765 | 390 | 85 | 235 | 100 | 55 | 74 | 1" | 280 | 165 | 125 |
| **200/2 B6** | 101 | 100 | 910 | 680 | 235 | 190 | 660 | 900 | 480 | 155 | 315 | 110 | 55 | 82 | 1" | 345 | 175 | 385 |
| **300/2 B6** | 101 | 100 | 1000 | 680 | 235 | 190 | 660 | 900 | 480 | 155 | 315 | 110 | 55 | 82 | 1" | 345 | 175 | 385 |
| **10/4 B1** | 80 | 80 | 520 | 475 | 130 | 110 | 455 | 675 | 390 | 95 | 225 | 100 | 55 | 74 | 1" | 280 | 165 | 125 |
| **15/4 B3** | 80 | 80 | 520 | 490 | 145 | 125 | 470 | 690 | 390 | 95 | 225 | 100 | 55 | 74 | 1" | 280 | 165 | 125 |
| **25/4 B4** | 80 | 80 | 520 | 570 | 190 | 160 | 545 | 770 | 390 | 85 | 225 | 100 | 55 | 74 | 1" | 280 | 165 | 125 |
| **35/4 B4** | 80 | 80 | 555 | 570 | 190 | 160 | 545 | 770 | 390 | 85 | 225 | 100 | 55 | 74 | 1" | 280 | 165 | 125 |
| **55/4 B6** | 101 | 100 | 765 | 670 | 235 | 190 | 650 | 890 | 480 | 155 | 315 | 110 | 55 | 82 | 1" | 345 | 175 | 385 |
| **75/4 B6** | 101 | 100 | 765 | 670 | 235 | 190 | 650 | 890 | 480 | 155 | 315 | 110 | 55 | 82 | 1" | 345 | 175 | 385 |
| **25/4 C1** | 100 | 100 | 565 | 570 | 185 | 160 | 550 | 790 | 390 | 95 | 270 | 110 | 55 | 82 | 1" | 310 | 175 | 150 |
| **35/4 C1** | 100 | 100 | 600 | 570 | 185 | 160 | 550 | 790 | 390 | 95 | 270 | 110 | 55 | 82 | 1" | 310 | 175 | 150 |
| **55/4 C5** | 101 | 100 | 765 | 645 | 230 | 180 | 625 | 865 | 480 | 125 | 315 | 110 | 55 | 82 | 1" | 345 | 175 | 385 |
| **75/4 C5** | 101 | 100 | 765 | 645 | 230 | 180 | 625 | 865 | 480 | 125 | 315 | 110 | 55 | 82 | 1" | 345 | 175 | 385 |
| **100/4 C5** | 101 | 100 | 825 | 645 | 230 | 180 | 625 | 865 | 480 | 125 | 315 | 110 | 55 | 82 | 1" | 345 | 175 | 385 |
| **150/4 C6** | 101 | 100 | 910 | 755 | 290 | 250 | 735 | 975 | 580 | 105 | 315 | 110 | 55 | 82 | 1" | 345 | 175 | 385 |
| **230/4 C6** | 101 | 100 | 1000 | 755 | 290 | 250 | 735 | 975 | 580 | 105 | 315 | 110 | 55 | 82 | 1" | 345 | 175 | 385 |
| **300/4 C6** | 101 | 100 | 1000 | 755 | 290 | 250 | 735 | 975 | 580 | 105 | 315 | 110 | 55 | 82 | 1" | 345 | 175 | 385 |
| **76/4 C5** | 101 | 100 | 765 | 645 | 230 | 180 | 625 | 865 | 480 | 125 | 315 | 110 | 55 | 82 | 1" | 345 | 175 | 385 |
| **151/4 C6** | 101 | 100 | 910 | 755 | 290 | 250 | 735 | 975 | 580 | 105 | 315 | 110 | 55 | 82 | 1" | 345 | 175 | 385 |
| **231/4 C6** | 101 | 100 | 1000 | 755 | 290 | 250 | 735 | 975 | 580 | 105 | 315 | 110 | 55 | 82 | 1" | 345 | 175 | 385 |
| **55/4 C2** | 151S | 150 | 790 | 770 | 260 | 200 | 740 | 1055 | 480 | 150 | 340 | 145 | 80 | 122 | 1½" | 435 | 260 | 385 |
| **75/4 C2** | 151S | 150 | 790 | 770 | 260 | 200 | 740 | 1055 | 480 | 150 | 340 | 145 | 80 | 122 | 1½" | 435 | 260 | 385 |
| **100/4 C2** | 151S | 150 | 850 | 770 | 260 | 200 | 740 | 1055 | 480 | 150 | 340 | 145 | 80 | 122 | 1½" | 435 | 260 | 385 |
| **150/4 C3** | 151 | 150 | 935 | 885 | 325 | 260 | 855 | 1175 | 630 | 130 | 340 | 145 | 80 | 122 | 1½" | 435 | 260 | 385 |
| **230/4 C3** | 151 | 150 | 1025 | 885 | 325 | 260 | 855 | 1175 | 630 | 130 | 340 | 145 | 80 | 122 | 1½" | 435 | 260 | 385 |
| **300/4 C4** | 151 | 150 | 1025 | 885 | 325 | 260 | 855 | 1175 | 630 | 130 | 340 | 145 | 80 | 122 | 1½" | 435 | 260 | 385 |
| **151/4 C3** | 151 | 150 | 935 | 885 | 325 | 260 | 855 | 1175 | 630 | 130 | 340 | 145 | 80 | 122 | 1½" | 435 | 260 | 385 |
| **231/4 C4** | 151 | 150 | 1025 | 885 | 325 | 260 | 855 | 1175 | 630 | 130 | 340 | 145 | 80 | 122 | 1½" | 435 | 260 | 385 |
| **230/4 C7** | 200S | 200 | 1070 | 935 | 325 | 260 | 905 | 1305 | 630 | 175 | 385 | 200 | 80 | 193 | 1½" | 535 | 350 | 400 |
| **300/4 C7** | 200S | 200 | 1070 | 935 | 325 | 260 | 905 | 1305 | 630 | 175 | 385 | 200 | 80 | 193 | 1½" | 535 | 350 | 400 |

## Dimensions pump base MultiStream (mm)

For transpotable application and mobile use on various sites, a pump with base and hose connection is suitable.

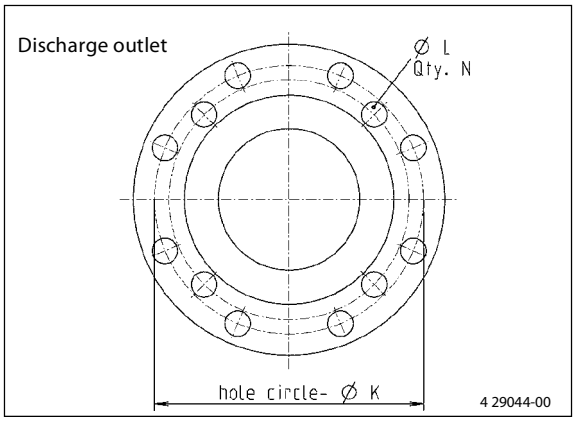


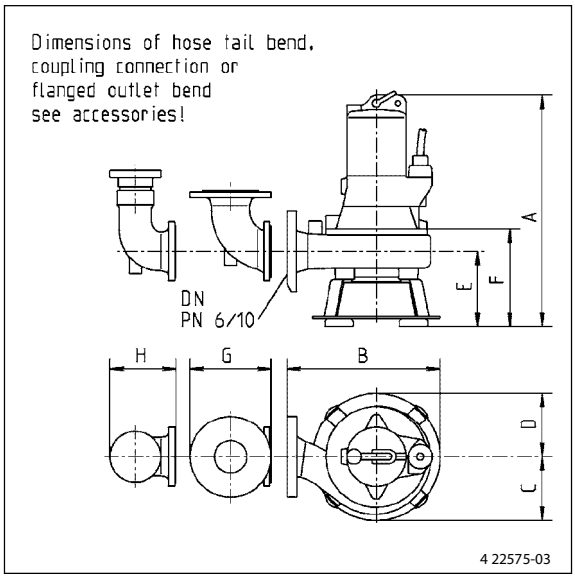


**MultiStream**

| Type UAK/UFK | DN | A | B | C | D | E | F | G | H | K | L | N |
|---|---|---|---|---|---|---|---|---|---|---|---|---|
| **10/2 A1** | 65 | 475 | 325 | 110 | 105 | 135 | 175 | 175 | 140 | 130/145 | 14/18 | 4 |
| **15/2 A1** | 65 | 475 | 325 | 110 | 105 | 135 | 175 | 175 | 140 | 130/145 | 14/18 | 4 |
| **25/2 A2** | 65 | 475 | 345 | 135 | 135 | 135 | 185 | 175 | 140 | 130/145 | 14/18 | 4 |
| **35/2 A2** | 65 | 510 | 345 | 135 | 135 | 135 | 185 | 175 | 140 | 130/145 | 14/18 | 4 |
| **25/2 B1** | 80 | 530 | 340 | 135 | 135 | 185 | 240 | 200 | 165 | 150/160 | 18 | 4/8 |
| **35/2 B2** | 80 | 570 | 380 | 145 | 135 | 185 | 240 | 200 | 165 | 150/160 | 18 | 4/8 |
| **55/2 B2** | 80 | 700 | 395 | 145 | 135 | 185 | 240 | 200 | 165 | 150/160 | 18 | 4/8 |
| **75/2 B5** | 80 | 725 | 460 | 195 | 195 | 215 | 280 | 200 | 165 | 150/160 | 18 | 4/8 |
| **100/2 B5** | 80 | 785 | 460 | 195 | 195 | 215 | 280 | 200 | 165 | 150/160 | 18 | 4/8 |
| **200/2 B6** | 100 | 885 | 535 | 235 | 195 | 210 | 290 | 230 | – | 170/180 | 18 | 4/8 |
| **300/2 B6** | 100 | 975 | 535 | 235 | 195 | 210 | 290 | 230 | – | 170/180 | 18 | 4/8 |
| **10/4 B1** | 80 | 530 | 340 | 135 | 135 | 185 | 240 | 200 | 165 | 150/160 | 18 | 4/8 |
| **15/4 B3** | 80 | 535 | 380 | 160 | 160 | 185 | 240 | 200 | 165 | 150/160 | 18 | 4/8 |
| **25/4 B4** | 80 | 535 | 440 | 190 | 160 | 185 | 240 | 200 | 165 | 150/160 | 18 | 4/8 |
| **35/4 B4** | 80 | 570 | 440 | 190 | 160 | 185 | 240 | 200 | 165 | 150/160 | 18 | 4/8 |
| **55/4 B6** | 100 | 740 | 520 | 235 | 195 | 210 | 290 | 230 | – | 170/180 | 18 | 4/8 |
| **75/4 B6** | 100 | 740 | 520 | 235 | 195 | 210 | 290 | 230 | – | 170/180 | 18 | 4/8 |
| **25/4 C1** | 100 | 600 | 450 | 195 | 195 | 235 | 305 | 230 | – | 170/180 | 18 | 4/8 |
| **35/4 C1** | 100 | 635 | 450 | 195 | 195 | 235 | 305 | 230 | – | 170/180 | 18 | 4/8 |
| **55/4 C5** | 100 | 775 | 480 | 230 | 195 | 240 | 320 | 230 | – | 170/180 | 18 | 4/8 |
| **75/4 C5** | 100 | 775 | 480 | 230 | 195 | 240 | 320 | 230 | – | 170/180 | 18 | 4/8 |
| **100/4 C5** | 100 | 835 | 480 | 230 | 195 | 240 | 320 | 230 | – | 170/180 | 18 | 4/8 |
| **150/4 C6** | 100 | 925 | 610 | 290 | 250 | 250 | 330 | 230 | – | 170/180 | 18 | 4/8 |
| **230/4 C6** | 100 | 1015 | 610 | 290 | 250 | 250 | 330 | 230 | – | 170/180 | 18 | 4/8 |
| **300/4 C6** | 100 | 1015 | 610 | 290 | 250 | 250 | 330 | 230 | – | 170/180 | 18 | 4/8 |
| **76/4 C5** | 100 | 775 | 480 | 230 | 195 | 240 | 320 | 230 | – | 170/180 | 18 | 4/8 |
| **151/4 C6** | 100 | 925 | 610 | 290 | 250 | 250 | 330 | 230 | – | 170/180 | 18 | 4/8 |
| **231/4 C6** | 100 | 1015 | 610 | 290 | 250 | 250 | 330 | 230 | – | 170/180 | 18 | 4/8 |
| **55/4 C2** | 150 | 770 | 580 | 260 | 215 | 240 | 320 | 320 | – | 225/240 | 18/22 | 8 |
| **75/4 C2** | 150 | 770 | 580 | 260 | 215 | 240 | 320 | 320 | – | 225/240 | 18/22 | 8 |
| **100/4 C2** | 150 | 830 | 580 | 260 | 215 | 240 | 320 | 320 | – | 225/240 | 18/22 | 8 |
| **150/4 C3** | 150 | 925 | 695 | 325 | 260 | 250 | 330 | 320 | – | 225/240 | 18/22 | 8 |
| **230/4 C3** | 150 | 1015 | 695 | 325 | 260 | 250 | 330 | 320 | – | 225/240 | 18/22 | 8 |
| **300/4 C4** | 150 | 1015 | 695 | 325 | 260 | 250 | 330 | 320 | – | 225/240 | 18/22 | 8 |
| **151/4 C3** | 150 | 925 | 695 | 325 | 260 | 250 | 330 | 320 | – | 225/240 | 18/22 | 8 |
| **231/4 C4** | 150 | 1015 | 695 | 325 | 260 | 250 | 330 | 320 | – | 225/240 | 18/22 | 8 |
| **230/4 C7** | 200 | 1015 | 725 | 325 | 260 | 250 | 330 | – | – | 295 | 22 | 8 |
| **300/4 C7** | 200 | 1015 | 725 | 325 | 260 | 250 | 330 | – | – | 295 | 22 | 8 |

| MultiStream Sewage pump without ex-proof | | Single unit | | Duplex unit | | MultiStream Sewage pump with ex-proof | | Single unit | | Duplex unit | |
|---|---|---|---|---|---|---|---|---|---|---|---|
| Type UAK | Code No. | Control unit without float switch | Code No. | Control unit without float switch | Code No. | Type UFK | Code No. | Control unit without float switch | Code No. | Control unit without float switch | Code No. |
| 10/2 A1 | **JP 09615** | AD 25 | **JP 00310** | BD 25 | **JP 00302** | 10/2 A1 | **JP 09628** | AD 25 Ex | **JP 09683** | BD 25 Ex | **JP 09681** |
| 15/2 A1 | **JP 09616** | AD 25 | **JP 00310** | BD 25 | **JP 00302** | 15/2 A1 | **JP 09629** | AD 25 Ex | **JP 09683** | BD 25 Ex | **JP 09681** |
| 25/2 A2 | **JP 09617** | AD 46 | **JP 14353** | BD 46 | **JP 14358** | 25/2 A2 | **JP 09630** | AD 46 Ex | **JP 14355** | BD 46 Ex | **JP 14360** |
| 35/2 A2 | **JP 09651** | AD 610 | **JP 14354** | BD 610 | **JP 14359** | 35/2 A2 | **JP 09653** | AD 610 Ex | **JP 14356** | BD 610 Ex | **JP 14361** |
| 25/2 B1 | **JP 09618** | AD 46 | **JP 14353** | BD 46 | **JP 14358** | 25/2 B1 | **JP 09631** | AD 46 Ex | **JP 14355** | BD 46 Ex | **JP 14360** |
| 35/2 B2 | **JP 09652** | AD 610 | **JP 14354** | BD 610 | **JP 14359** | 35/2 B2 | **JP 09654** | AD 610 Ex | **JP 14356** | BD 610 Ex | **JP 14361** |
| 55/2 B2 | **JP 09663** | AS 46* | **JP 14406** | BS 46* | **JP 14411** | 55/2 B2 | **JP 09664** | AS 46* | **JP 14406** | BS 46* | **JP 14411** |
| 75/2 B5 | **JP 00485** | AS 610 | **JP 14407** | BS 610 | **JP 14412** | 75/2 B5 | **JP 09665** | AS 610 | **JP 14407** | BS 610 | **JP 14412** |
| 100/2 B5 | **JP 09740** | AS 1016 | **JP 14408** | BS 1016 | **JP 14413** | 100/2 B5 | **JP 09741** | AS 1016 | **JP 14408** | BS 1016 | **JP 14413** |
| 200/2 B6 | **JP 00492** | AS 1624 | **JP 14409** | BS 1624 | **JP 14414** | 200/2 B6 | **JP 00472** | AS 1624 | **JP 14409** | BS 1624 | **JP 14414** |
| 300/2 B6 | **JP 00471** | AS 2440 | **JP 14410** | BS 2440 | **JP 14415** | 300/2 B6 | **JP 00473** | AS 2440 | **JP 14410** | BS 2440 | **JP 14415** |
| 10/4 B1 | **JP 09620** | AD 25 | **JP 00310** | BD 25 | **JP 00302** | 10/4 B1 | **JP 09633** | AD 25 Ex | **JP 09683** | BD 25 Ex | **JP 09681** |
| 15/4 B3 | **JP 09622** | AD 25 | **JP 00310** | BD 25 | **JP 00302** | 15/4 B3 | **JP 09635** | AD 25 Ex | **JP 09683** | BD 25 Ex | **JP 09681** |
| 25/4 B4 | **JP 09623** | AD 46 | **JP 14353** | BD 46 | **JP 14358** | 25/4 B4 | **JP 09636** | AD 46 Ex | **JP 14355** | BD 46 Ex | **JP 14360** |
| 35/4 B4 | **JP 09647** | AD 610 | **JP 14354** | BD 610 | **JP 14359** | 35/4 B4 | **JP 09649** | AD 610 Ex | **JP 14356** | BD 610 Ex | **JP 14361** |
| 55/4 B6 | **JP 00486** | AS 610* | **JP 14407** | BS 610* | **JP 14412** | 55/4 B6 | **JP 09666** | AS 610* | **JP 14407** | BS 610* | **JP 14412** |
| 75/4 B6 | **JP 00489** | AS 610 | **JP 14407** | BS 610 | **JP 14412** | 75/4 B6 | **JP 09667** | AS 610 | **JP 14407** | BS 610 | **JP 14412** |
| 25/4 C1 | **JP 09624** | AD 46 | **JP 14353** | BD 46 | **JP 14358** | 25/4 C1 | **JP 09637** | AD 46 Ex | **JP 14355** | BD 46 Ex | **JP 14360** |
| 35/4 C1 | **JP 09648** | AD 610 | **JP 14354** | BD 610 | **JP 14359** | 35/4 C1 | **JP 09650** | AD 610 Ex | **JP 14356** | BD 610 Ex | **JP 14361** |
| 55/4 C5 | **JP 09901** | AS 610* | **JP 14407** | BS 610* | **JP 14412** | 55/4 C5 | **JP 09902** | AS 610* | **JP 14407** | BS 610* | **JP 14412** |
| 75/4 C5 | **JP 09904** | AS 610 | **JP 14407** | BS 610 | **JP 14412** | 75/4 C5 | **JP 09905** | AS 610 | **JP 14407** | BS 610 | **JP 14412** |
| 100/4 C5 | **JP 09275** | AS 1016 | **JP 14408** | BS 1016 | **JP 14413** | 100/4 C5 | **JP 09276** | AS 1016 | **JP 14408** | BS 1016 | **JP 14413** |
| 150/4 C6 | **JP 09882** | AS 1624 | **JP 14409** | BS 1624 | **JP 14414** | 150/4 C6 | **JP 09883** | AS 1624 | **JP 14409** | BS 1624 | **JP 14414** |
| 230/4 C6 | **JP 09885** | AS 1624 | **JP 14409** | BS 1624 | **JP 14414** | 230/4 C6 | **JP 09886** | AS 1624 | **JP 14409** | BS 1624 | **JP 14414** |
| 300/4 C6 | **JP 09888** | AS 2440 | **JP 14410** | BS 2440 | **JP 14415** | 300/4 C6 | **JP 09889** | AS 2440 | **JP 14410** | BS 2440 | **JP 14415** |
| 76/4 C5 | **JP 09398** | AS 610 | **JP 14407** | BS 610 | **JP 14412** | 76/4 C5 | **JP 09399** | AS 610 | **JP 14407** | BS 610 | **JP 14412** |
| 151/4 C6 | **JP 09400** | AS 1624 | **JP 14409** | BS 1624 | **JP 14414** | 151/4 C6 | **JP 09401** | AS 1624 | **JP 14409** | BS 1624 | **JP 14414** |
| 231/4 C6 | **JP 09402** | AS 1624 | **JP 14409** | BS 1624 | **JP 14414** | 231/4 C6 | **JP 09403** | AS 1624 | **JP 14409** | BS 1624 | **JP 14414** |
| 55/4 C2 | **JP 00487** | AS 610* | **JP 14407** | BS 610* | **JP 14412** | 55/4 C2 | **JP 09668** | AS 610* | **JP 14407** | BS 610* | **JP 14412** |
| 75/4 C2 | **JP 00490** | AS 610 | **JP 14407** | BS 610 | **JP 14412** | 75/4 C2 | **JP 09669** | AS 610 | **JP 14407** | BS 610 | **JP 14412** |
| 100/4 C2 | **JP 09678** | AS 1016 | **JP 14408** | BS 1016 | **JP 14413** | 100/4 C2 | **JP 09679** | AS 1016 | **JP 14408** | BS 1016 | **JP 14413** |
| 150/4 C3 | **JP 00491** | AS 1624 | **JP 14409** | BS 1624 | **JP 14414** | 150/4 C3 | **JP 00474** | AS 1624 | **JP 14409** | BS 1624 | **JP 14414** |
| 230/4 C3 | **JP 00883** | AS 1624 | **JP 14409** | BS 1624 | **JP 14414** | 230/4 C3 | **JP 00884** | AS 1624 | **JP 14409** | BS 1624 | **JP 14414** |
| 300/4 C4 | **JP 00493** | AS 2440 | **JP 14410** | BS 2440 | **JP 14415** | 300/4 C4 | **JP 00475** | AS 2440 | **JP 14410** | BS 2440 | **JP 14415** |
| 151/4 C3 | **JP 09445** | AS 1624 | **JP 14409** | BS 1624 | **JP 14414** | 151/4 C3 | **JP 09446** | AS 1624 | **JP 14409** | BS 1624 | **JP 14414** |
| 231/4 C4 | **JP 09447** | AS 1624 | **JP 14409** | BS 1624 | **JP 14414** | 231/4 C4 | **JP 09448** | AS 1624 | **JP 14409** | BS 1624 | **JP 14414** |
| 230/4 C7 | **JP 09392** | AS 1624 | **JP 14409** | BS 1624 | **JP 14414** | 230/4 C7 | **JP 09393** | AS 1624 | **JP 14409** | BS 1624 | **JP 14414** |
| 300/4 C7 | **JP 09394** | AS 2440 | **JP 14410** | BS 2440 | **JP 14415** | 300/4 C7 | **JP 09395** | AS 2440 | **JP 14410** | BS 2440 | **JP 14415** |

*In connection with UAK/UFK 55/... a controll unit with direct start is required.

For UFK pumps please consider the dry run protection JP 41463.

**Additional requirements, see technical data control units**

## Flushing tube

Especially in connection with sumps designed by customers, where the shape of the collecting tank is not always ideal, a flushing tube offers the facility to reduce deposits at the sump wall and the formation of surface scums. The flushing tube is mounted instead of the ventilation screw. The special arrangement prevents the flushing tube from blocking and increases the operational reliability.

## Seal leak detector

The seal leak detector is used to monitor the sealing of the oil chamber between the motor and the hydraulic section of the pumps in the series US / UB and UAK/UFK. If ingress of water into the oil chamber occurs an integrated buzzer is activated.

## Discharge connection combi. PN 6 / PN 10

Thanks to the discharge connection combination PN 6 / PN 10 on all MultiStream-und MultiFree sewage pumps an universal connection to existing pipe systems is very simple. If the existing connection does not comply with the standard dimensions of DIN 1092, connection adapters for several installation situations can be obtained on request.

| Nominal diameter | Hole centre line diameter-Ø | | Number of bolts | | Bolt size | |
|---|---|---|---|---|---|---|
| | PN 6 | PN 10 | PN 6 | PN 10 | PN 6 | PN 10 |
| DN 65 | 130 | 145 | 4 | 4 | M 12 | M 16 |
| DN 80 | 150 | 160 | 4 | 8 | M 16 | M 16 |
| DN 100 | 170 | 180 | 4 | 8 | M 16 | M 16 |
| DN 150 | 225 | 240 | 8 | 8 | M 16 | M 20 |
| DN 200 | – | 295 | – | 8 | – | M 20 |

## Adjustable axial gap (MultiStream)

In order to ensure optimum efficiency of a pump with channel type hydraulics over a long running period, our pumps have the possibility of adjusting the gap between the impeller and the wear ring or spiral housing by turning a central screw and thereby achieve the optimum setting. This adjustment can be carried out during a normal maintenance operation. It brings the additional advantage of a significant reduction in the possibility of a blockage occurring. Should, nevertheless, solid particle become deposited in the gap, the grooves located in the axial gap area facilitate these being transported away and reduce even further the risk of blockage.

## Ceramic anti-wear coating

Channel type impellers have a larger contact area with the medium being pumped than vortex impellers. This means that they are more exposed to wear caused by abrasive liquids. An optimum coating with liquid ceramic can protect the impeller over a long period of time.

In addition a free solids passage of up to 100 mm is a further assurance of blockage free pumping.

## Moisture sealed cable inlet

To protect the motorcasing from water intake through the power cable the separate cores are bared and spilled with a special resin. Only this expensive method guarantees a lasting moisture consistency.