Submersible drainage pumps US 73–253
30/40 mm free passage

JUNG PUMPEN
Pentair Water

Application

The centrifugal submersible drainage pumps US 73-253 are suitable for dealing with contaminated water and capable of handling solids up to 30 and 40 mm particle size without stones. Fibrous waste water, as found in laundries or automatic launderettes and waste water from domestic dishwashers and washing machines can be handled by this pump range. For hot water in the industrial and commercial market we recommend the US 73 and US 103 HE/HES.

This range of pumps is suitable for stationary and portable use. For easy removal of the pumps from deep sumps we recommend the use of our guide rail systems which provide ease of maintenance and inspection.

For automatic monitoring of the oil chamber a seal leak control can be connected.

The cable length is 10 m. The 3-phase pumps with built-in level control (US 153 DS and US 253 DS) have a CEE-plug with phase inverter.

The sewage pumps are tested by the German Institute for Construction Engineering and correspond to the valid construction and test principles.

Performance

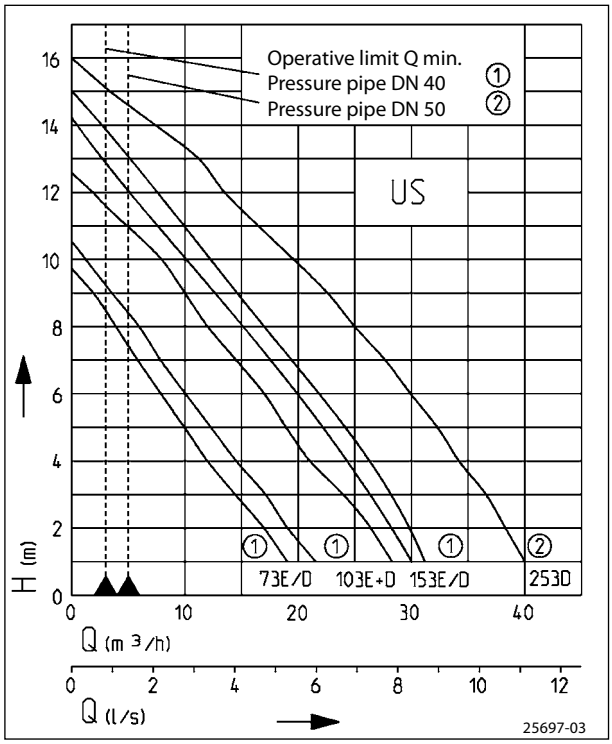

We reserve the right to change specifications without notice
Pump performance is subject to ISO 9906 tolerances
The minimum flow velocity in the pressure piping must be 0.7 m/s according to EN 12056.
This data is represented in the performance curve as a limit of application.

- Safe to run dry
- Easy to maintain due to guide rail systems
- 30 mm free passage (US 73, 103+153)
- 40 mm free passage (US 253)
- Controllable oil chamber
- SiC mechanical seal independent of rotation direction
- Replaceable moisture sealed cable inlet

Submersible drainage pumps US 73–253

Type	Maximum Height x Width x Depth	Discharge branch	Free passage	Cable quality H07RN-F-	Cable length with plug	Cable length without plug	Weight approx.	Code No.
Pump without level control								
US 73 E	380 x 195 x 210 mm	1½″	30 mm	3G1.0	10 m		12.5 kg	**JP 00676**
US 73 D	380 x 195 x 210 mm	1½″	30 mm	4G1.0	10 m		12.5 kg	**JP 00677**
US 103 E	410 x 195 x 210 mm	1½″	30 mm	3G1.0	10 m		14.0 kg	**JP 09280**
US 103 D	410 x 195 x 210 mm	1½″	30 mm	4G1.0	10 m		14.5 kg	**JP 09258**
US 153 E	435 x 195 x 210 mm	1½″	30 mm	3G1.0		10 m	16.5 kg	**JP 09311**
US 153 D	435 x 195 x 210 mm	1½″	30 mm	4G1.0		10 m	17.0 kg	**JP 09302**
Pumps with level control								
US 73 ES	380 x 230 x 325 mm	1½″	30 mm	3G1.0	10 m		12.5 kg	**JP 00678**
US 73 DS	380 x 230 x 325 mm	1½″	30 mm	4G1.0	10 m		13.0 kg	**JP 00679**
US 103 ES	410 x 230 x 325 mm	1½″	30 mm	3G1.0	10 m		14.0 kg	**JP 09281**
US 103 DS	410 x 230 x 325 mm	1½″	30 mm	4G1.0	10 m		15.0 kg	**JP 09259**
US 153 ES	435 x 230 x 325 mm	1½″	30 mm	3G1.0	10 m		17.0 kg	**JP 09247**
US 153 DS*	435 x 230 x 325 mm	1½″	30 mm	4G1.0	10 m		18.0 kg	**JP 09249**
Pumps without level control								
US 253 D	400 x 190 x 280 mm	2″	40 mm	6G1.5		10 m	26.5 kg	**JP 09303**
Pumps with built-in level control								
US 253 DS*	400 x 190 x 280 mm	2″	40 mm	6G1.5	10 m		28.0 kg	**JP 09251**

* CEE-Motorprotection with phase inverter

Performance

Typ	Delivery head H [m]	1	2	3	4	5	6	7	8	9	10	11	12	13	14
US 73 E/ES		19	17	15	12	10	8	6	4	2		Flow rate Q [m³/h]			
US 73 D/DS		22	20	17	15	12	10	8	6	4					
US 103 E/ES/D/DS		28	26	23	21	19	17	15	12	10	8	5	2		
US 153 E/ES		30	29	27	24	22	20	18	15	13	11	8	6	3	1
US 153 D/DS		31	30	28	26	23	21	19	17	14	12	10	8	5	3
US 253 D/DS		40	38	36	34	32	30	28	25	23	20	17	14	10	7

Electrical Data

Type	Type of current	Voltage Volt	Motor rating kW P_1	P_2	RPM min.$^{-1}$	Current Ampere	Motor protection	Plug
US 73 E/ES	1-phase	1/N/PE~230	0.83	0.50	2510	3.9	integrated	Safety-
US 73 D/DS	3-phase	3/PE~400	0.85	0.60	2800	1.4	integrated	CEE-
US 103 E/ES	1-phase	1/N/PE~230	1.37	0.98	2700	6.0	integrated	Safety-
US 103 D/DS	3-phase	3/PE~400	1.36	1.06	2740	2.4	integrated	CEE-
US 153 E	1-phase	1/N/PE~230	1.60	1.21	2814	7.5	on site*	–
US 153 ES	1-phase	1/N/PE~230	1.60	1.21	2814	7.5	integrated	Safety-**
US 153 D	3-phase	3/PE~400	1.70	1.41	2815	3.1	on site*	–
US 153 DS	3-phase	3/PE~400	1.70	1.41	2815	3.1	integrated	CEE-**
US 253 D	3-phase	3/N/PE~400	2.60	2.10	2860	4.4	on site*	–
US 253 DS	3-phase	3/N/PE~400	2.60	2.10	2860	4.4	integrated	CEE-**

* additional requirements, see technical data or accessories ** Protective motor plug

Dimensions US 73, US 103 and US 153 (mm)

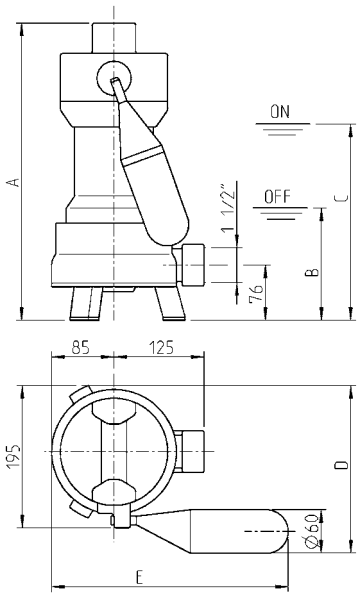

US	A	B	C	D	E
73	380	125	240	230	325
103	410	155	270	230	325
153	435	180	295	230	325
73*	380	105	155	255	280
103*	410	135	185	255	280
153*	435	160	210	255	280

* with low level float code no.17424

25632-04

Dimensions US 253 (mm)

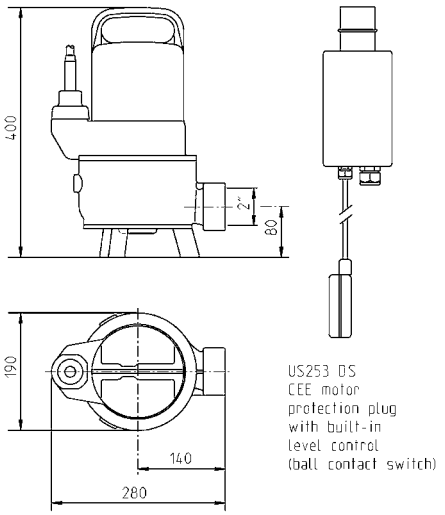

24033-03

Dimensions with GR 40 (mm)

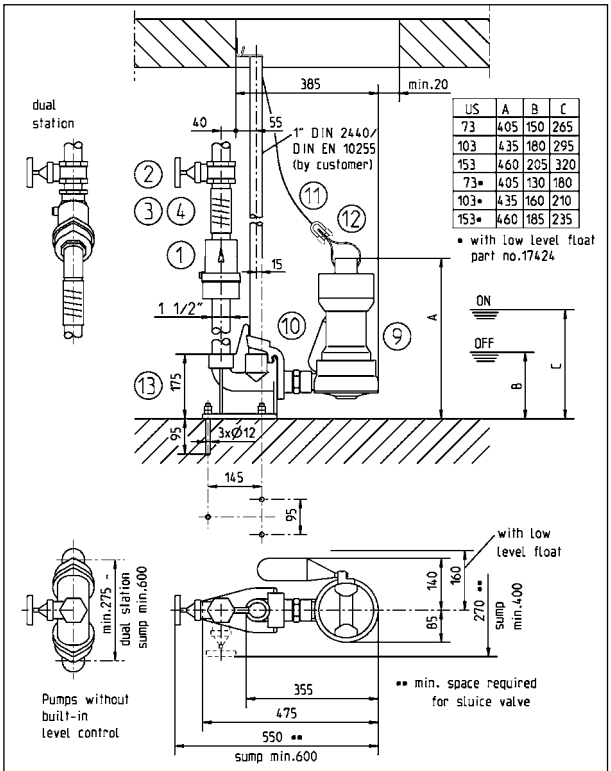

US	A	B	C
73	405	150	265
103	435	180	295
153	460	205	320
73*	405	130	180
103*	435	160	210
153*	460	185	235

* with low level float
part no.17424

25695-11

Dimensions with GR 50 (mm)

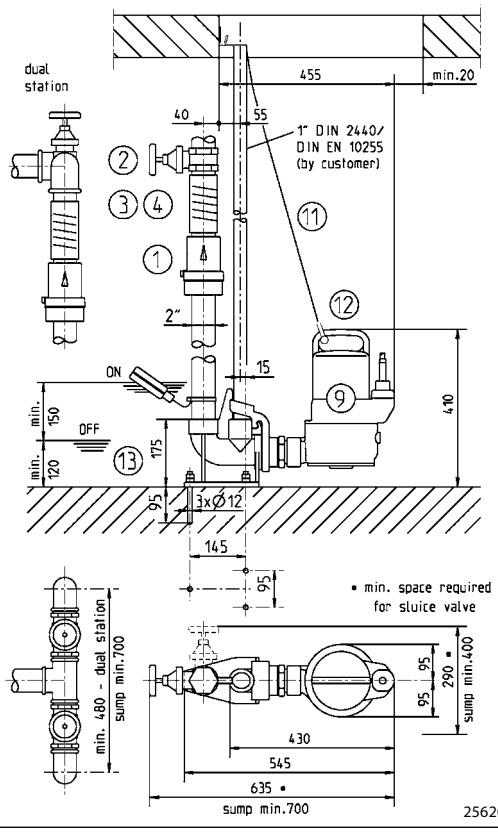

25620-10

Accessories

				H	W	D	Code No.	73 E	73 ES	73 D	73 DS
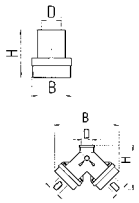	1	**Swing-type check valve** DIN EN 12050-4	1½“ (DN 40), PN 4	150	120	1½“	JP 00317	●	●	●	●
			2“ (DN 50), PN 4	150	120	2“	JP 00326				
		Ball check valve DIN EN 12050-4	2“ (DN 50), PN 6	185	155	2“	JP 09857				
		Elbow ball check valve DIN EN 12050-4	1½“ (DN 40), PN 6,	170	125	1½	JP 22442	●	●	●	●
		Duplex swing-type check valve for duplex pump stations, DIN EN 12050-4	1½“ (DN 40), PN 4	200	280	1½“	JP 09155	●		●	
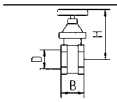	2	**Stop valve**	1½“ (DN 40), PN 16	H 125	W max. 60	D 1½“	JP 11837	●	●	●	●
			2“ (DN 50), PN 16	140	max. 67	2“	JP 11838				
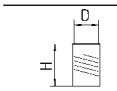	3	**Elastic connection**	1½“ (DN 40), PN 4	H 120	D 50		JP 20368	●	●	●	●
			2“ (DN 50), PN 4	150	63		JP 17194				
	4	**Hose band clamp**	1½“				JP 03571	●	●	●	●
			2“				JP 03572				
	5	**Elbow** 1½“					JP 17894	●	●	●	●
		Elbow 2“					JP 14230				
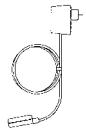	6	**Alarm system** with submersible ball contact switch, separate, mains-dependent, with potential-free contact and 3 m cable					JP 16723		●		●
		Alarm system ditto, with 9.5 m cable					JP 24434		●		●
		Alarm system for **washing-machines** with submersible ball contact switch with 3 m cable, separate, mains-dependent					JP 25090	●	●	●	●
		Alarm system for **washing-machines** ditto, with 9.5 m cable					JP 25091	●	●	●	●
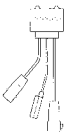 ND 1	7	**Separate level controls** for single units (see level controls for description)									
		NE 1 (Single-phase current)	with sub. ball contact switch 3.0 m				JP 16710	●			
		NE 2 (Single-phase current)	with sub. ball contact switch 9.5 m				JP 16711	●			
		ND 1 (3-phase current)	with sub. ball contact switch 3.0 m				JP 16712			●	
		ND 3 (3-phase current)	with sub. ball contact switch 9.5 m				JP 16713			●	
		NE 1A (Single-phase current)	with sub. ball contact switch 3.0 m and alarm system				JP 16714	●			
		NE 2A (Single-phase current)	with sub. ball contact switch 9.5 m and alarm system				JP 16715	●			
		ND 1A (3-phase current)	with sub. ball contact switch 3.0 m and alarm system				JP 16716			●	
		ND 3A (3-phase current)	with sub. ball contact switch 9.5 m and alarm system				JP 16717			●	
		Counterweight (1 piece)					JP 17541	●		●	
 BD		**Duplex control units** (see section on level controls for description)									
		BD 00 E (Single-phase current)					JP 00482	●			
		BD 00 (3-phase current)					JP 00299			●	
		BD 25 (3-phase current)					JP 00302				
		BD 46 (3-phase current)					JP 14358				
 B		Subm. switch pack B with 3 subm. ball contact switches with 9.5 m cable a. fixing devices					JP 16725	●		●	
		BmG with 3 subm. ball contact switches with 9.5 m cable and counterweight					JP 16726	●		●	
		Protective motor plug– 8 A, 230 V (without level control)					JP 40770				
		Protective motor plug– 2.5–4 A, 400 V (without level control)					JP 40773				
		CEE-Protective motor plug– 400 V (without level control) 3.7–5.5 A					JP 12266				
	8	**Rechargeable battery** for off the line operation of the alarm system					JP 07562	●	●	●	●
	9	**Seal leak detector** DKG					JP 00252	●	●	●	●
	10	**Special float assembly** for low switching points									
		Switching points ON/OFF	US 73 ON/OFF	US 103 ON/OFF	US 153		JP 17424		●		●
		without GR 155/105 mm	185/135 mm	210/160 mm							
		with GR 180/130 mm	210/160 mm	235/185 mm							
	11	**Chain** with 2 rings DIN 766, 2.5 m, 320 kg					JP 19189	●	●	●	●
		Chain stainless steel with 5 rings, 1 shackle NG 10, DIN 766, 2.5 m, 200 kg					JP 23986	●	●	●	●
	12	**Shackle** A 0.6					JP 13402	●	●	●	●
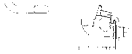	13	**Guide rail system** GR 40					JP 25592	●	●	●	●
		Guide rail system GR 50					JP 25593				

* only for single units ■only in connection with a motor protection plug ○ Control unit on request

103 E	103 ES	103 D	103 DS	153 E	153 ES	153 D	153 DS	253 D	253 DS
●	●	●	●	●	●	●	●		
								●	●
								●	●
●	●	●	●	●	●	●	●		
●		●		●		●			
●	●	●	●	●	●	●	●		
								●	●
●	●	●	●	●	●	●	●		
								●	●
●	●	●	●	●	●	●	●		
								●	●
●	●	●	●	●	●	●	●		
								●	●
	●		●		●		●		●
	●		●		●		●		●
●	●	●	●	●	●	●	●	●	●
●	●	●	●	●	●	●	●	●	●
●				■					
●				■					
		●				■		■	
		●				■		■	
●				■					
●				■					
		●				■		■	
		●				■		■	
●		●		■		■		■	
●				○					
		●							
						●			
								●	
●		●				●		●	
●		●				●		●	
				●					
						●			
								●	
●	●	●	●	●	●	●	●	●	●
●	●	●	●	●	●	●	●	●	●
	●		●		●		●		
●	●	●	●	●	●	●	●	●	●
●	●	●	●	●	●	●	●	●	●
●	●	●	●	●	●	●	●	●	●
●	●	●	●	●	●	●	●		
								●	●

Example of single pump installation with GR

US 73+103+153 sump area with GR 40 min. 40 x 60 cm
US 75+103+153 sump area without GR min. 40 x 40 cm (without illustration)
US 253 sump area with GR 50 min. 40 x 70 cm (without illustration)
US 253 sump area without GR min. 40 x 50 cm (without illustration)

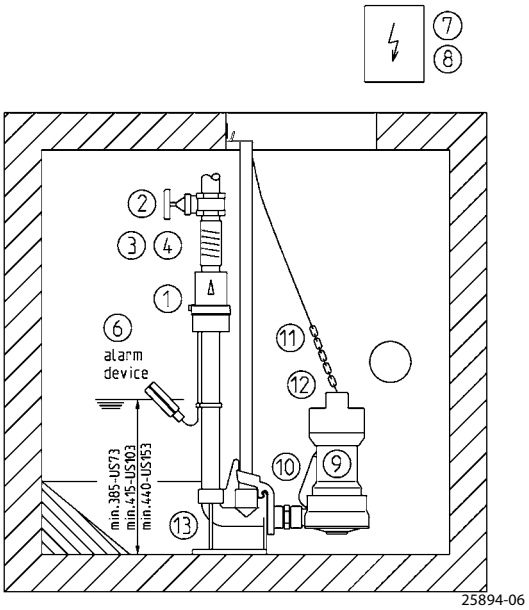

In case of installation beneath the backpressure level the pressure tube mustbe taken in a loop over the local backup level acc. to EN 12056. Besides, it must be secured with an EN 12050-4-proofed swing-type check valve. Additionally we recommend an alarm system.

Example of duplex pump installation

US 73+103+153 sump area without GR min. 40 x 60 cm
US 73+103+153 sump area with GR 40 min. 60 x 40 cm (without illustration)
US 253 sump area without GR 50 min. 50 x 70 cm (without illustration)
US 253 sump area with GR 50 min. 70 x 70 cm (without illustration)

Suspend control unit in a dry room.

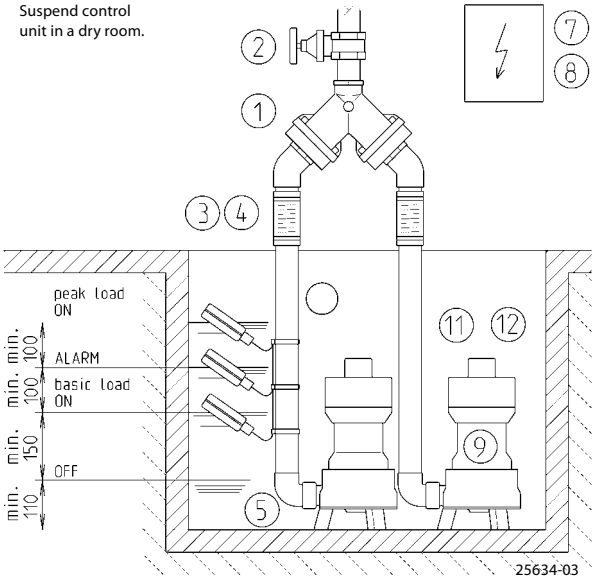

In accordance with DIN EN 12056-4 section 5.1, it has a built-in automatic spare pump or a double attachment included, which ensures that sewage drainage is not interrupted.

Technical data

Pump
Vertical, single stage, submersible, open centrifugal impeller, volute casing with free inlet.
US 73, US 103 and US 153: Free passage 30 mm, horizontal discharge branch with 1½" (female thread).
US 253: Free passage 40 mm, horizontal discharge branch with 2" (female thread).

Bearings
Common shaft for pump and motor, with ball bearings, deep groove ball bearing with grease chamber (US 253 with angular ball bearings).

Seal
Silicon carbide mechanical seal, oil chamber and duplex rotary seal towards the motor section, safe to run dry, a seal leak control can be connected.

Motor
Submersible, motor type of enclosure IP 68, insulation class B or F (US 253), winding thermostat protects the motor from overload, starting via plug, automatically via mounted circuit or submersible ball contact switches.

US 153 E/D: To protect the motor, a correct adjusted motor protecting switch has to be provided in the control unit at site by the customer.

US 253 D: To protect the motor, a correct adjusted motor protecting switch has to be provided in the control unit at site by the customer. The winding thermostat must be connected in series with the input side of the motor contactor.

Material
Volute casing made of GG grey cast iron, power supply through rubber insulated flexible cable
US 73, US 103 and US 153: Terminal board lid, vortex impeller, wear plate and foot strainer made of GRP, motor casing and shaft in stainless steel.
US 253: Motor casing, volute casing and cable inlet made of GG grey cast iron, foot strainer and vortex impeller made of GRP, shaft from C 45 steel encapsulated.

Installation
Pump can be installed free standing or in connection with guide rail system GR 40 or GR 50.

Scope of supply
Pump according to DIN EN 12050 ready for connection with 10 m cable. US 73 and US 103 with safety plug (1-phase) or CEE-Plug (3-phase).
US 153 and 253: Pumps without level control with free lead end. Pump with level control with CEE-motor protective plug and phase inverter (3-phase) or safety-plug (1-phase).